Appendix D1

Technical support document for the development of MOVES5 onroad mobile emissions inventories for 2017, 2022, 2032, and 2038

National Capital Region
Transportation Planning Board

DEVELOPMENT OF OZONE ON-ROAD MOBILE EMISSIONS INVENTORIES

Prepared for the 2015 Ozone National Ambient Air Quality Standards Redesignation Request and Maintenance Plan for the Washington, D.C. metropolitan region.

June 2026

National Capital Region
Transportation Planning Board

DEVELOPMENT OF OZONE ON-ROAD MOBILE EMISSIONS INVENTORIES
May 2026

ABOUT THE TPB
The National Capital Region Transportation Planning Board (TPB) is the federally designated metropolitan planning organization (MPO) for metropolitan Washington. It is responsible for developing and carrying out a continuing, cooperative, and comprehensive transportation planning process in the metropolitan area. Members of the TPB include representatives of the transportation agencies of the states of Maryland and Virginia and the District of Columbia, 24 local governments, the Washington Metropolitan Area Transit Authority, the Maryland and Virginia General Assemblies, and nonvoting members from the Metropolitan Washington Airports Authority and federal agencies. The TPB is staffed by the Department of Transportation Planning at the Metropolitan Washington Council of Governments (COG).

CREDITS
Kanti Srikanth, Director, Department of Transportation Planning
Dusan Vuksan, Model Application Group Program Manager

Anant Choudhary
Rob d'Abadie
Jinchul Park
Ho Jun Son

ACCOMMODATIONS POLICY
Alternative formats of this document are available upon request. Visit www.mwcog.org/accommodations or call (202) 962-3300 or (202) 962-3213 (TDD).

TITLE VI NONDISCRIMINATION POLICY
The Metropolitan Washington Council of Governments (COG) fully complies with Title VI of the Civil Rights Act of 1964 and related statutes and regulations prohibiting discrimination in all programs and activities. For more information, to file a Title VI related complaint, or to obtain information in another language, visit www.mwcog.org/nondiscrimination or call (202) 962-3300.

El Consejo de Gobiernos del Área Metropolitana de Washington (COG) cumple con el Título VI de la Ley sobre los Derechos Civiles de 1964 y otras leyes y reglamentos en todos sus programas y actividades. Para obtener más información, someter un pleito relacionado al Título VI, u obtener información en otro idioma, visite www.mwcog.org/nondiscrimination o llame al (202) 962-3300.

Copyright © 2023 by the Metropolitan Washington Council of Governments

TABLE OF CONTENTS

1. INTRODUCTION	1
2. BACKGROUND	1
3. OVERVIEW OF METHODS AND PLANNING ASSUMPTIONS	1
4. TRAVEL DEMAND MODEL AND INPUTS	4
5. MOVES MODEL INPUTS	6
5.1 POST PROCESSOR	6
5.2 VMT/VHT FRACTIONS	7
5.3 AVERAGE SPEED	8
5.4 ROAD TYPE	12
5.5 AGE DISTRIBUTION	12
5.6 FUEL FORMULATION	13
5.7 METEOROLOGY DATA	13
5.8 ALTERNATIVE VEHICLE FUEL TECHNOLOGY (AVFT)	13
5.9 ROAD TYPE DISTRIBUTION	14
5.10 SOURCE TYPE (VEHICLE) POPULATION	15
5.11 INSPECTION/MAINTENANCE (I/M) PROGRAMS & HOTELING	17
5.12 FEDERAL AND STATE SPECIFIC CONTROL PROGRAMS	17
6.0 RESULTS	18

ATTACHMENTS

TABLES

TABLE 1 TRAVEL-RELATED ASSUMPTIONS/METHODS USED IN THE INVENTORIES 2
TABLE 2 NON-TRAVEL RELATED ASSUMPTIONS AND METHODS USED IN THE INVENTORIES 2
TABLE 3 HOUSEHOLD DATA BY JURISDICTION AND YEAR* 4
TABLE 4 EMPLOYMENT DATA BY JURISDICTION AND YEAR* 5
TABLE 5 AVERAGE WEEKDAY VEHICLE MILES TRAVELED BY JURISDICTION AND YEAR* 5
TABLE 6 AVERAGE WEEKDAY VHT DISTRIBUTION FOR REFUSE TRUCKS 11
TABLE 7 VHT DISTRIBUTION OF SCHOOL BUSES (6:00 AM – 6:00 PM) SOURCE: FAIRFAX COUNTY, VA 11
TABLE 8 VHT DISTRIBUTION OF TRANSIT BUSES 12
TABLE 9 MOVES INPUT VEHICLE POPULATION BY ANALYSIS YEAR 16
TABLE 10 2015 OZONE NAAQS RR/MP ON-ROAD EMISSIONS INVENTORIES FOR OZONE NONATTAINMENT AREA (IN SHORT TONS/DAY)* 18
TABLE 11 2015 OZONE NAAQS RR/MP ON-ROAD EMISSIONS INVENTORIES FOR OZONE NONATTAINMENT AREA BY JURISDICTION (IN SHORT TONS/DAY)* 18

FIGURES

FIGURE 1 WASHINGTON DC-MD-VA OZONE NONATTAINMENT AREA MAP 3
FIGURE 2 POST-PROCESSING OF TRAVEL DEMAND RESULTS 7
FIGURE 3 ANNUAL VMT CALCULATION PROCESS 8
FIGURE 4 ROAD TYPE DISTRIBUTION DEVELOPMENT PROCESS 15
FIGURE 5 SOURCE TYPE POPULATION DEVELOPMENT PROCESS OF FUTURE ANALYSIS YEAR 17

1. INTRODUCTION

This report documents the development of on-road emissions inventories used in the 2015 Ozone National Ambient Air Quality Standards (NAAQS) Redesignation Request and Maintenance Plan (RR/MP) for the Washington, D.C. metropolitan region. The inventories were developed by Transportation Planning Board (TPB) staff at the request of the Metropolitan Washington Air Quality Committee (MWAQC). The on-road inventories will later be combined with emissions estimates developed for other sources to formulate a complete accounting of ground-level ozone in the region. This report summarizes the planning assumptions and technical methods supporting the on-road inventory development and presents results at the jurisdiction and regional levels. The inventory addresses two pollutants: Nitrogen Oxides (NOx) and Volatile Organic Compounds (VOCs). Pollutant estimates were prepared for four analysis years: 2017, 2022, 2032 and 2038. A summary of results is included at the end of the report.

2. BACKGROUND

On June 4, 2018 (83 FR 25776) EPA designated the Metropolitan Washington, DC-MD-VA region as a "marginal" nonattainment area for the 2015 Ozone NAAQS with an effective date of August 3, 2018. The region failed to meet the NAAQS by the prescribed attainment date (Aug 3, 2021) and was subsequently reclassified as "moderate" nonattainment and given a new NAAQS attainment date (Aug 3, 2024). On April 4, 2025, final rulemaking by the EPA (40 CFR Part 52), with an effective date of May 5, 2025, confirmed that the region has met the 2015 NAAQS for Ozone. The rulemaking consisted of three actions: (1) an exceptional events waiver was granted for monitor readings determined to be detrimentally impacted by the Canadian wildfires, (2) granting a Clean Data Determination (CDD) for the region, and (3) granting a Determination of Attainment by Attainment Date (DAAD) for the region. Subsequently, in 2025, the region began development of a Redesignation Request and Maintenance Plan, which includes Motor Vehicle Emissions Budgets (MVEBs or mobile budgets) for NOx and VOC.

3. OVERVIEW OF METHODS AND PLANNING ASSUMPTIONS

Mobile emission inventories are developed on a year-by–year basis using the regional travel demand model and the EPA MOtor Vehicle Emission Simulator (MOVES) model. Several sequential steps are undertaken for each year that is analyzed. First, the Transportation Planning Board's (TPB's) adopted travel demand model is used to formulate vehicle miles traveled (VMT) at the network link level of analysis. The modeled VMT outputs are developed at the network link level by vehicle type and four time periods. Next, a post processor is used to further refine link-level VMT and link speeds into vehicle hours traveled (VHT) by facility type, hourly periods, and speed "bins." Finally, several data preparation steps are undertaken before the MOVES mobile emissions model is executed on a jurisdictional basis in order to compute mobile emissions. An overview of the travel model, post processor, and MOVES data preparation steps is presented below.

The TPB staff developed 2017, 2022, 2032, and 2038 travel-related data specifically for the 2015 Ozone NAAQS Redesignation Request/Maintenance Plan. The key planning assumptions and methods are listed in Table 1. The modeling methods include the TPB's currently adopted travel demand model,

Version 2.4.6,[1][2][3] and the EPA MOVES5.0.0 emissions model. The land activity projections used in the travel demand modeling are based on the Round 10.0 Cooperative Forecasts except for 2017. Round 9.2 land use data was used for developing the 2017 base-year estimates because the more recent rounds of Cooperative Forecasts did not go that far back.

Table 1 Travel-Related Assumptions/Methods Used in the Inventories

Land Activity:	COG Round 9.2* and 10.0 Cooperative Forecasts
Travel Demand Model:	Version 2.4.6
Mobile Emissions Model:	MOVES5.0.0
Network Assumptions:	Visualize 2050 Metropolitan Transportation Plan
Vehicle Registration Data:	2023 Vehicle Registration Inventories

*Land activity for 2017 was developed based on Round 9.2.

The non-travel-related inputs to the MOVES5.0.0 model, relating to meteorology, inspection and maintenance (I/M) programs, and fuel formulation and supply, were provided by state air agencies in coordination with COG's Department of Environmental Programs (DEP). DEP staff provided modeling assumptions and guidance in a July 28, 2025 e-mail (Attachment A), although Alternative Vehicle Fuel Technology (AVFT) data assumptions were subsequently amended after extensive discussions with state air agency and department of transportation staff (as described in Section 5.8). The meteorology data available from Dulles airport for the period July 2017 were used to develop on-road emissions inventories for the base year 2017 and other analysis years as part of the 2015 ozone RR/MP analysis. The non-travel related assumptions and methods underlying the ozone emissions inventories are listed in Table 2.

Table 2 Non-travel-related Assumptions and Methods Used in the Inventories

Inspection & Maintenance Programs:	Year-specific programs/MOVES5.0.0 format
Fuel Programs:	Year-specific programs/MOVES5.0.0 format
Meteorology:	July 2017 data from Dulles Airport

The Washington, D.C region Ozone Nonattainment Area includes the following jurisdictions: Washington, D.C., Montgomery County, Prince George's County, Frederick County, Charles County, Calvert County, the City of Alexandria, Arlington County, Fairfax County, Loudoun County, and Prince William County. Cities and towns within each jurisdiction are also included. The Ozone Nonattainment Area and the area associated with travel modeling are shown in Figure 1.

[1] Calibration Report for the TPB Travel Forecasting Model, Version 2.3, on the 3722-Zone Area System. Final Report. Washington DC: National Capital Region Transportation Planning Board, January 20, 2012. http://www.mwcog.org/transportation/activities/models/files/FY2012/V2.3_Calibration_Report_v14.pdf

[2] "Year 2018 Validation of TPB Version 2.4 Travel Model: Technical Memorandum from Meseret Seifu, Sanghyeon Ko – August 17, 2021. https://www.mwcog.org/assets/1/6/Ver2.4_2018Validation_Memo_v6.pdf

[3] User's Guide for the COG/TPB Gen2/Version 2.4.6 Travel Demand Forecasting Model. Washington, D.C.: Metropolitan Washington Council of Governments, National Capital Region Transportation Planning Board, February 9, 2026. https://www.mwcog.org/assets/1/6/mwcog_tpb_travel_model_Ver2.4.6_User_Guide_Updated_2-9-2026.pdf

Figure 1 Washington DC-MD-VA Ozone Nonattainment Area Map

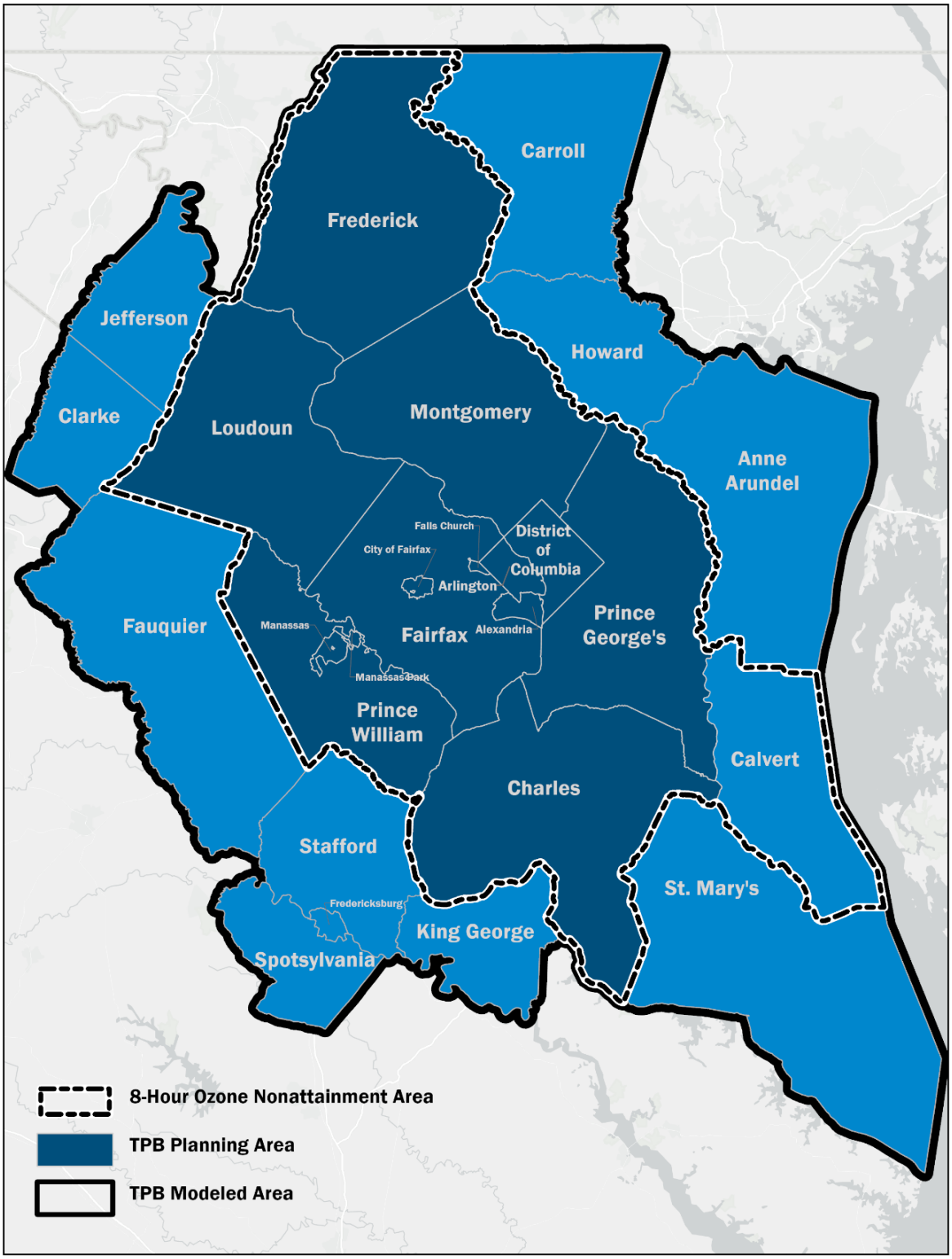

4. TRAVEL DEMAND MODEL AND INPUTS

The Version 2.4.6 travel model is a trip-based (or four-step) forecasting process that operates on a 3,722 Transportation Analysis Zone (TAZ) system. The model was initially calibrated using the 2007/08 Household Travel Survey and several on-board transit surveys.[4] The model was subsequently revised and re-validated to 2018 conditions, including traffic counts, Metrorail electronic counts, the American Community Survey, and the Geographically Focused Household Travel Survey.[5] In addition, some of the model inputs, such as demographic data and networks, were informed by the more recent trends and were prepared in 2024. Version 2.4.6 model is documented in the most recent User's Guide.[6] The networks used in the process are consistent with the networks used for the region's latest federally required metropolitan transportation plan called Visualize 2050.[7]

The COG Round 10.0 Cooperative Forecasts are projections of households, population, and employment (by type), prepared at the TAZ level. Household and employment summaries by jurisdiction for the specific Ozone Maintenance Plan analysis years are provided in Tables 3 and 4, respectively. Note that Round 9.2 Cooperative Forecasts are used to represent households, population, and employment in the 2017 base-year.

Table 3 Household Data by Jurisdiction and Year*

Jurisdiction	2017	2022	2032	2038
District of Columbia	305,963	325,150	374,707	399,206
Montgomery Co., MD	381,359	391,338	423,537	443,660
Prince George's Co., MD	326,394	346,815	374,818	394,703
Arlington Co., VA	105,631	113,225	129,049	137,370
City of Alexandria, VA	72,977	79,620	100,520	111,935
Fairfax Co., VA	425,047	439,332	479,957	500,644
Loudoun Co., VA	127,699	142,038	164,783	172,604
Prince William Co., VA	163,776	178,103	198,263	206,054
Frederick Co., MD	93,325	101,476	118,124	129,343
Charles Co., MD	56,331	63,612	72,821	67,290
Calvert Co., MD	32,697	121,905	35,514	145,192
Total	2,091,199	2,302,614	2,472,093	2,708,001

*Round 9.2 Cooperative Forecasts for 2017; and Round 10.0 for other years

[4] TPB, Calibration Report for the TPB Travel Forecasting Model, Version 2.3, on the 3722-Zone Area System.

[5] "Year 2018 Validation of TPB Version 2.4 Travel Model: Technical Memorandum from Meseret Seifu, Sanghyeon Ko – August 17, 2021. https://www.mwcog.org/assets/1/6/Ver2.4_2018Validation_Memo_v6.pdf

[6] User's Guide for the COG/TPB Gen2/Version 2.4.6 Travel Demand Forecasting Model. Washington, D.C.: Metropolitan Washington Council of Governments, National Capital Region Transportation Planning Board, February 9, 2026. https://www.mwcog.org/assets/1/6/mwcog_tpb_travel_model_Ver2.4.6_User_Guide_Updated_2-9-2026.pdf

[7] Visualize 2050: National Capital Region Transportation Plan, prepared for the National Capital Region Transportation Planning Board (December 2025). https://visualize2050.org/wp-content/uploads/2025/12/Visualize-2050-Process-Document.pdf

Table 4 Employment Data by Jurisdiction and Year*

Jurisdiction	2017	2022	2032	2038
District of Columbia	817,462	809,978	901,156	942,024
Montgomery Co., MD	529,480	505,293	554,693	581,985
Prince George's Co., MD	346,060	348,737	372,831	390,722
Arlington Co., VA	210,733	211,141	233,439	250,334
City of Alexandria, VA	106,507	97,414	98,120	105,918
Fairfax Co., VA	709,248	705,182	804,211	842,722
Loudoun Co., VA	176,571	196,681	232,485	247,265
Prince William Co., VA	182,445	190,714	223,491	241,131
Frederick Co., MD	112,914	111,231	127,262	138,099
Charles Co., MD	47,662	63,411	51,454	68,218
Calvert Co., MD	27,745	188,946	25,323	226,224
Total	3,266,827	3,428,728	3,624,465	4,034,642

*Round 9.2 Cooperative Forecasts for 2017; and Round 10.0 for other years

The travel demand model produces a wide array of outputs including zonal origins and destinations by travel volumes and by travel network segments. Modeled VMT is the most critical output of the travel model for the purpose of estimating on-road emissions. The jurisdiction level VMT results estimated by the Version 2.4.6 travel demand model, the Visualize 2050 Metropolitan Transportation Plan (MTP) networks and the Round 9.2 and 10.0 Cooperative Forecasts are shown in Table 5. The VMT estimates shown reflect on-network travel only and do not include local road VMT.

Table 5 Average Estimated Weekday Vehicle Miles Traveled by Jurisdiction and Year*

Jurisdiction	2017	2022	2032	2038
District of Columbia	7,964,566	7,902,280	8,252,536	8,399,890
Montgomery Co., MD	20,704,054	21,163,841	22,421,629	23,239,148
Prince George's Co., MD	22,633,063	23,327,425	25,065,474	26,003,699
Arlington Co., VA	4,067,613	4,162,817	4,442,514	4,564,531
City of Alexandria, VA	2,114,208	2,177,857	2,360,703	2,434,946
Fairfax Co., VA	28,312,851	29,494,191	31,871,992	32,816,068
Loudoun Co., VA	7,250,769	7,899,975	9,129,444	9,530,439
Prince William Co., VA	10,026,382	10,730,418	11,659,498	12,086,329
Frederick Co., MD	9,146,946	9,115,674	10,408,952	11,101,986
Charles Co., MD	3,224,809	3,216,698	3,748,461	4,004,668
Calvert Co., MD	1,653,197	1,624,269	1,798,972	1,849,449
Total	117,098,458	120,815,445	131,160,175	136,031,153

*Round 9.2 Cooperative Forecasts for 2017; and Round 10.0 for other years

5. MOVES MODEL INPUTS

This section reviews the data inputs that were prepared for the MOVES model. The MOVES model is currently executed on a yearly basis, for each jurisdiction in the Ozone Nonattainment Area. As such, jurisdiction-level databases (or Excel files) are prepared in a format that is consistent with prescribed specifications in the software documentation. Some inputs are prepared as parameters that are indicated in MOVES-related scripting. TPB currently executes the MOVES5.0.0 model in the "inventory" mode.

When EPA released initial versions of the MOVES emissions model, a regional task force was formed to provide guidance on MOVES-related inputs that would be acceptable to regional stakeholders. Staff from both transportation and environmental agencies served the task force. During 18 monthly meetings, between August 2009 and January 2010, the task force agreed to an approach for developing emissions inventories using MOVES. A summary table of the approach is included as Attachment B.

5.1 Post Processor

A post processor is used to reformat network link-level outputs from the travel model into MOVES compatible format. The post processor is used to create vehicle hours traveled (VHT) and vehicle miles traveled (VMT) distributions by jurisdiction. The jurisdictional distributions are further distinguished by three vehicle types (passenger vehicles, commercial vehicles, and trucks), two facility types (freeways and arterials), and 14 speed groups or "bins."

The post processor aggregates six travel markets from the travel demand model outputs into three vehicle types as follows:

- Passenger Vehicles = SOV + HOV2 + HOV3 or more + Airport Passenger Trips;
- Commercial Vehicles = Commercial Vehicles; and
- Heavy Duty Vehicles = Trucks.

Six facility types are grouped into two as follows:

- Freeway = freeway + expressway + freeway ramp; and
- Arterials = major arterial + minor arterial + collector.

The post processor is executed for each analysis year. It yields jurisdictional VMT distributions by three vehicle types and hourly jurisdictional VHT distributions by MOBILE6's 14 speed bins and two facility types. Figure 2 illustrates the post-processing of travel demand outputs. The post processor also includes provisions to add local VMT to the on-network VMT developed by the travel model, so that the full universe of travel is accounted for.

Figure 2 Post-Processing of Travel Demand Results

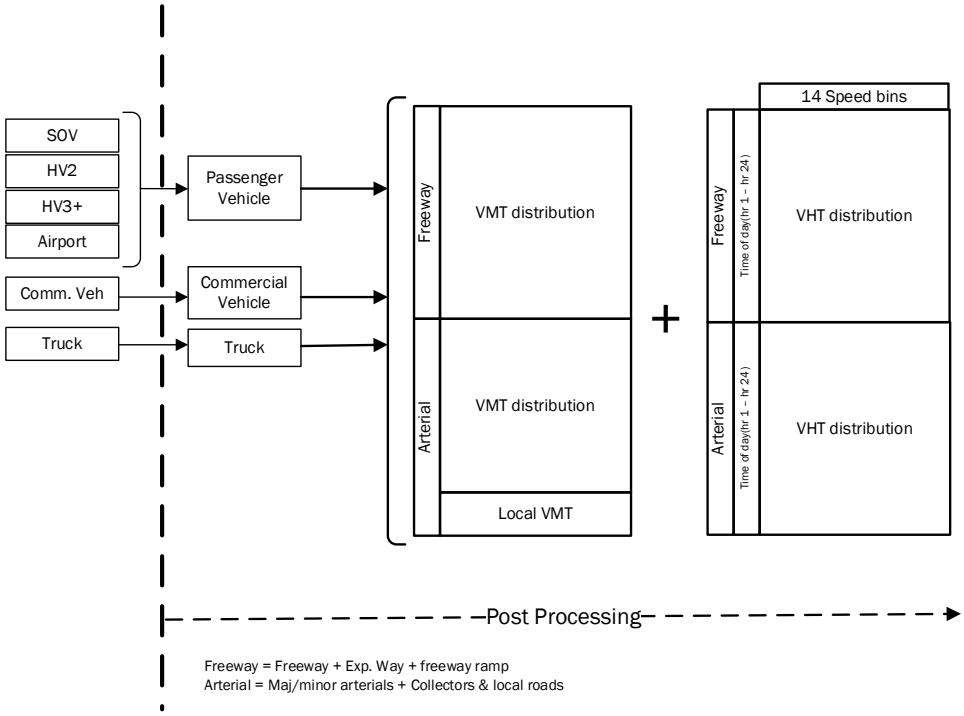

5.2 VMT/VHT Fractions

MOVES requires annual VMT of five Highway Performance Monitoring System (HPMS) vehicle types:

- Motorcycles (sourceTypeID = 10);
- Light duty vehicles (sourceTypeID = 25);
- Buses (sourceTypeID = 40);
- Single unit trucks (sourceTypeID = 50); and
- Combination trucks (sourceTypeID =60).

Average annual weekday VMT estimates include on-network data from the travel demand model outputs as well as local road VMT estimates, which is added exogenously. Auto access VMT for transit riders, acquired from a Metrorail Survey, is added to the VMT of Light Duty Vehicles (sourceTypeID = 25). Modeled VMT is divided into three vehicle types: passenger vehicles, commercial vehicles, and heavy-duty vehicles. Local road VMT is developed by using a combination of observed and simulated data in the post-processing shown in Figure 2. The local road VMT shares are added to VMT from the travel model to produce total VMT. The resulting total VMT of the three vehicle types is then classified by five MOVES vehicle types using observed jurisdictional Highway Performance Monitoring System

(HPMS) VMT percentages. Figure 3 illustrates the process of developing annual VMT for five HPMS vehicle types.

Figure 3 Annual VMT Calculation Process

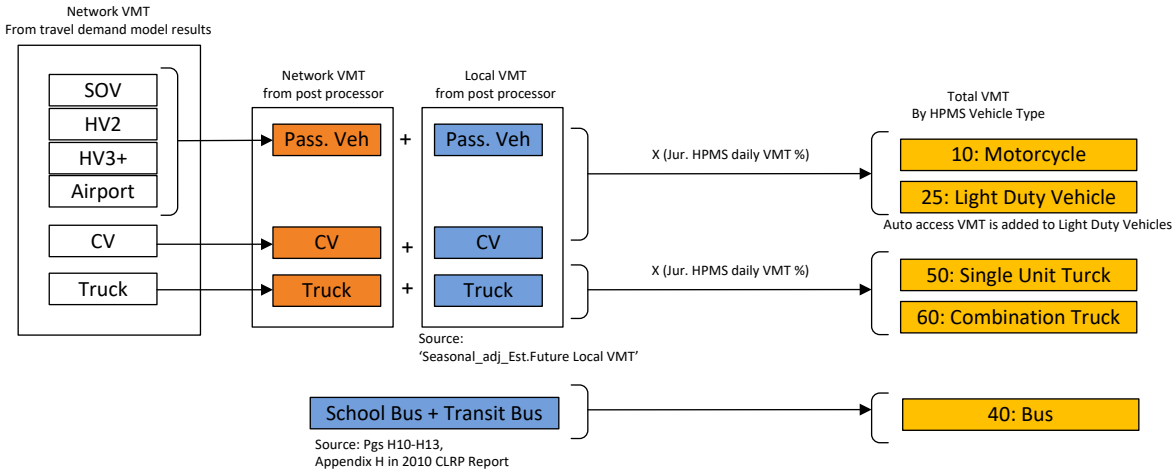

The average annual weekday VMT total by five HPMS vehicle types is entered into an EPA converter, AADVMT Converter for MOVES5,[8] to convert average weekday VMT into average annual travel. The converter includes local monthly adjustment factors and weekend-day adjustment factors. The converter generates three VMT fractions as outputs: 'monthVMTfraction,' 'dayVMTfraction' and hourlyVMTfraction' which are entered MOVES to estimate emissions.

5.3 Average Speed

MOVES requires speed distributions by vehicle type and time period. Vehicle Hours of Travel (VHT) distributions are selected as a suitable proxy for average speed distribution. MWCOG/TPB's regional travel demand model outputs are first processed to derive VHT distributions for six vehicle categories:

- Single Occupancy Vehicles (SOV);
- High Occupancy Vehicles 2 (HOV2);
- High Occupancy Vehicles 3+ (HOV3 or more);
- Commercial Vehicles;
- Trucks; and
- Airport Passenger Trips.

Through post-processing, six VHT distributions are developed for three vehicle types, MOBILE6's 14 speed bins, hour of the day, and two facility types (i.e., freeways and arterials); and later reclassified into MOVES model's 16 speed bins, hour of the day, day of the week (i.e., weekdays and weekend

[8] The Excel spreadsheet is downloadable at https://www.epa.gov/moves/tools-develop-or-convert-moves-inputs.

days), and four facility types. Six vehicle types from the travel demand model are reclassified into three vehicle types as follows:

- Passenger Vehicles = SOV + HOV2 + HOV3 or more + Airport Passenger Trips;
- Commercial Vehicles = Commercial Vehicles; and
- Heavy Duty Vehicles = Trucks.

MOVES requires: (1) 16 speed bins from 2.5 mph to 75 mph in increments of 5 mph; and (2) four road types, which are a combination of two facility types (i.e., restricted and unrestricted) and two environmental settings (i.e., urban and rural settings). The restricted facilities include freeways, expressways, and freeway ramps, while the unrestricted facilities include major/minor arterials, collectors, and local roads. The following assumptions are used to develop average speed distributions fulfilling the MOVES requirements stated above:

1. VHT Distribution to Restricted Facilities:

    a. All vehicle types:
        - Weekday VHT Distribution:
            - All Day: Hourly distribution for all vehicles
        - Weekend VHT Distribution:
            - 11:00 am – 7:00 pm: Distribution across the 13 MOVES vehicle type categories reflecting the 3:00 pm hour on a weekday
            - 7:01 pm – 10:59 am: Distribution across the 13 MOVES vehicle type categories reflecting the 12:00 am hour on a weekday

2. VHT Distribution to Unrestricted Facilities:

    a. All vehicle types exclusive of refuse trucks, school buses and transit buses:
        - Weekday VHT Distribution:
            - All Day: Hourly distribution for all vehicles
        - Weekend VHT Distribution:
            - 11:00 am – 7:00 pm: Distribution reflecting the 3:00 pm hour on a weekday
            - 7:01 pm – 10:59 am: Distribution reflecting the 12:00 am hour on a weekday

    b. Refuse trucks: Refuse trucks operate on a 3-phase cycle: Phase 1 is the period of driving from the dispatch garage to trash collection sites; Phase 2 is the period of the actual trash/recycle collection; Phase 3 is the period of driving back to transfer stations. Using local data from Fairfax County, VA, the average speed of Phases 1 and 3 is assumed to be in the range of 22.5-27.5 miles per hour (i.e., MOVES Speed Bin 6), and the average speed of Phase 2 is assumed to be in the range of 2.5-7.5 miles per hour (i.e., MOVES Speed Bin 2). Based on the above assumptions the refuse truck vehicle type VHT distributions are as follows:

        - Weekday VHT Distribution (see Table 6):

- 5:00 am–5:00 pm (Trash Collection): VHT hourly distributions according to Phases 1, 2 and 3.
- 5:01 pm–5:00 am (On Road Phase): VHT hourly distribution consists of Phase 2.

- Weekend VHT Distribution:
  - All Day: VHT distribution made up of Phase 1 and Phase 3 (on road phases)

c. School buses:
   - Weekday VHT Distribution:
     -6:00 am – 6:00 pm: VHT distribution (see Table 7)
     -6:00 pm – 6:00 am: VHT distribution of heavy-duty vehicles

   - Weekend VHT Distribution:
     - 11:00 am–7:00 pm: VHT Distribution of heavy-duty vehicles at 3:00 pm on a weekday
     - 7:00 pm – 11:00 am: VHT Distribution of heavy-duty vehicles at 12:00 am on a weekday

d. Transit buses:
   - Weekday VHT Distributions (see Table 8):
     -6:00 – 9:00 am: Per WMATA's bus speed distribution of the AM peak period
     -9:00 am–3:00 pm: Per WMATA's bus speed distribution of the off-peak period
     -3:00 - 6:00 pm: Per WMATA's bus speed distribution of the PM peak period
     -6:00pm-6:00 am: Per WMATA's bus speed distribution of the off-peak period

   - Weekend VHT Distribution (see Table 8):
     -All Day: Per WMATA's bus speed distribution of the off-peak period.

Table 6 Average Weekday VHT Distribution for Refuse Trucks
Source: Fairfax County, VA

Speed Bins	Speed Range	5:00 AM - 5:00 PM	5:01 PM - 4:59 AM
1	speed < 2.5mph	0.00%	0.00%
2	2.5mph <= speed < 7.5mph	62.65%	0.00%
3	7.5mph <= speed < 12.5mph	0.00%	0.00%
4	12.5mph <= speed < 17.5mph	0.00%	0.00%
5	17.5mph <= speed <22.5mph	0.00%	0.00%
6	22.5mph <= speed < 27.5mph	37.35%	100.00%
7	27.5mph <= speed < 32.5mph	0.00%	0.00%
8	32.5mph <= speed < 37.5mph	0.00%	0.00%
9	37.5mph <= speed < 42.5mph	0.00%	0.00%
10	42.5mph <= speed < 47.5mph	0.00%	0.00%
11	47.5mph <= speed < 52.5mph	0.00%	0.00%
12	52.5mph <= speed < 57.5mph	0.00%	0.00%
13	57.5mph <= speed < 62.5mph	0.00%	0.00%
14	62.5mph <= speed < 67.5mph	0.00%	0.00%
15	67.5mph <= speed < 72.5mph	0.00%	0.00%
16	72.5mph <= speed	0.00%	0.00%

Table 7 VHT Distribution of School Buses (6:00 am – 6:00 pm)
Source: Fairfax County, VA

avgSpeedBinID	avgBinSpeed	avgSpeedBinDesc	6:00AM-9:00AM	3:00PM-6:00PM	9:01AM-2:59PM/6:01PM-5:59AM
1	2.5	speed < 2.5mph	**9.94%**	**9.10%**	**7.92%**
2	5	2.5mph <= speed < 7.5mph	**13.79%**	**18.95%**	**14.49%**
3	10	7.5mph <= speed < 12.5mph	**34.07%**	**37.86%**	**31.36%**
4	15	12.5mph <= speed < 17.5mph	**28.52%**	**23.97%**	**29.17%**
5	20	17.5mph <= speed <22.5mph	**10.02%**	**5.92%**	**10.77%**
6	25	22.5mph <= speed < 27.5mph	**1.88%**	**1.84%**	**3.91%**
7	30	27.5mph <= speed < 32.5mph	**0.92%**	**0.85%**	**1.04%**
8	35	32.5mph <= speed < 37.5mph	**0.34%**	**0.60%**	**0.72%**
9	40	37.5mph <= speed < 42.5mph	**0.14%**	**0.50%**	**0.35%**
10	45	42.5mph <= speed < 47.5mph	**0.05%**	**0.15%**	**0.15%**
11	50	47.5mph <= speed < 52.5mph	**0.31%**	**0.28%**	**0.06%**
12	55	52.5mph <= speed < 57.5mph	**0.00%**	**0.00%**	**0.06%**
13	60	57.5mph <= speed < 62.5mph	**0.00%**	**0.00%**	**0.00%**
14	65	62.5mph <= speed < 67.5mph	**0.00%**	**0.00%**	**0.00%**
15	70	67.5mph <= speed < 72.5mph	**0.00%**	**0.00%**	**0.00%**
16	75	72.5mph <= speed	**0.00%**	**0.00%**	**0.00%**

Table 8 VHT Distribution of Transit Buses
Source: Washington Metropolitan Area Transit Authority (WMATA)

Speed Bins	Speed Range	Bus Trip 1	Bus Trip 2	Bus Trip 3	Bus Trip 4	Bus Trip 5	Bus Trip 6	Bus Trip 7	Bus Trip 8	Bus Trip 9	Bus Trip 10	Bus Trip 11	Weighted Average
1	speed < 2.5mph	35.20%	24.30%	17.58%	14.65%	7.90%	16.11%	6.65%	18.30%	25.76%	16.18%	17.67%	**19.21%**
2	2.5mph <= speed < 7.5mph	10.87%	11.57%	6.45%	11.04%	29.89%	20.20%	44.83%	11.01%	9.68%	6.49%	9.12%	**14.39%**
3	7.5mph <= speed < 12.5mph	10.90%	9.35%	12.89%	6.50%	26.31%	17.69%	3.34%	9.12%	9.52%	6.69%	8.69%	**10.92%**
4	12.5mph <= speed < 17.5mph	8.81%	9.18%	8.59%	9.45%	6.00%	11.13%	23.76%	10.12%	9.98%	8.46%	10.32%	**10.37%**
5	17.5mph <= speed <22.5mph	5.01%	10.15%	5.18%	14.04%	3.04%	5.94%	4.09%	10.36%	7.57%	9.74%	12.02%	**8.30%**
6	22.5mph <= speed < 27.5mph	8.91%	8.55%	11.62%	12.59%	6.18%	5.30%	3.54%	7.29%	7.11%	8.87%	11.73%	**8.13%**
7	27.5mph <= speed < 32.5mph	8.79%	7.97%	14.36%	11.28%	5.86%	13.33%	6.35%	9.43%	5.37%	10.06%	10.20%	**9.41%**
8	32.5mph <= speed < 37.5mph	5.33%	9.10%	5.86%	13.43%	7.62%	3.32%	6.36%	13.79%	8.68%	12.04%	6.81%	**7.81%**
9	37.5mph <= speed < 42.5mph	3.43%	6.89%	8.69%	7.02%	4.80%	3.76%	1.07%	7.94%	9.79%	13.81%	8.16%	**7.22%**
10	42.5mph <= speed < 47.5mph	1.72%	2.44%	8.79%	0.00%	2.40%	2.87%	0.00%	1.31%	5.83%	5.15%	4.75%	**3.42%**
11	47.5mph <= speed < 52.5mph	0.68%	0.00%	0.00%	0.00%	0.00%	0.36%	0.00%	0.67%	0.31%	2.27%	0.36%	**0.59%**
12	52.5mph <= speed < 57.5mph	0.34%	0.50%	0.00%	0.00%	0.00%	0.00%	0.00%	0.67%	0.41%	0.24%	0.18%	**0.23%**
13	57.5mph <= speed < 62.5mph	0.00%	0.00%	0.00%	0.00%	0.00%	0.00%	0.00%	0.00%	0.00%	0.00%	0.00%	**0.00%**
14	62.5mph <= speed < 67.5mph	0.00%	0.00%	0.00%	0.00%	0.00%	0.00%	0.00%	0.00%	0.00%	0.00%	0.00%	**0.00%**
15	67.5mph <= speed < 72.5mph	0.00%	0.00%	0.00%	0.00%	0.00%	0.00%	0.00%	0.00%	0.00%	0.00%	0.00%	**0.00%**
16	72.5mph <= speed	0.00%	0.00%	0.00%	0.00%	0.00%	0.00%	0.00%	0.00%	0.00%	0.00%	0.00%	**0.00%**

5.4 Road Type

MWCOG/TPB travel demand model has six facility types; and these facilities are grouped into two as follows for MOVES:

- Restricted facility = freeway + expressway + freeway ramp; and
- Unrestricted facility = major arterial + minor arterial + collector.

Restricted and Unrestricted facilities are further divided into urban or rural facilities. Thus, five facility types were created such as urban restricted, urban unrestricted, rural restricted, rural unrestricted, and off network.

5.5 Age Distribution

Every three years since 2005, the Departments of Motor Vehicles of the District of Columbia, Maryland, and Virginia have been supplying MWCOG/TPB with vehicle registration data for use in Air Quality Conformity (AQC) Determinations and State Implementation Plan (SIP) updates. The most recent 2023 Vehicle Identification Number (VIN) data are a snapshot of vehicle registrations by year, collected by Departments of Motor Vehicles in the three states. The VIN data contains a broad range of attributes of the vehicles registered in the jurisdictions of the Metropolitan Washington DC area. The latest data are used in the development of future year vehicle population profiles (i.e., vehicle age and vehicle type distribution) for all the analysis years in the Ozone Maintenance Plan.

Prior to using the VIN data as input to MOVES, the 'raw' vehicle registration data were decoded using a commercial decoding software program.[9] Following EPA's guidelines, the data were decoded in two

[9] VinPower, Copyright; ESP Data Solutions Inc., Product version 4.0.0.42

steps: (1) the 'raw' data were decoded to a MOBILE6 format; and (2) the MOBILE6 format vehicle population distributions were converted to a MOVES format using an EPA converter.[10] Thus, 16 MOBILE6 vehicle types and 25 vehicle age categories were mapped into the MOVES 13 vehicle and 41 vehicle age categories. The vehicle population of the 2023 VIN data was reviewed by the MWCOG/TPB technical oversight committees prior to becoming approved for transportation planning applications.

5.6 Fuel Formulation

The state air agencies of the District of Columbia, the state of Maryland, and the Commonwealth of Virginia provided state-specific fuel characteristics data for the analysis years in a MOVES5.0.0-ready format.

5.7 Meteorology Data

The meteorology data used for the 2015 ozone NAAQS Redesignation Request/Maintenance Plan analysis were developed using July 2017 meteorology data from Dulles airport.

5.8 Alternative Vehicle Fuel Technology (AVFT)

MOVES5 inputs for electric vehicle shares (and shares for other technologies) were frozen at the 2025 levels, so that the future projections are based on the most current data and do not reflect the forecasted growth in electric vehicles between today and the future years included in the MOVES default data. State air agencies had initially developed local AVFT data using a MOVES-based tool to estimate future-year shares of vehicles by each vehicle category. However, as a result of extensive discussions at the Metropolitan Washington Air Quality Committee – Technical Advisory Committee (MWAQC-TAC) meetings in November 2025 and January 2026,[11] the committee decided that a less aggressive pace of vehicle electrification that is now reflected in the AVFT inputs would be more appropriate for future modeled years in light of the Rescission of the Greenhouse Gas Endangerment Finding and Motor Vehicle Greenhouse Gas Emission Standards Under the Clean Air Act and the proposed Revision of Tier 4 Criteria Pollutant Standards.[12,13] This was accomplished by making relevant modifications to the AVFT Table to freeze electric vehicle shares at the 2025 levels, in which, for each source type and model year, users can define the fraction of vehicles that are gasoline, diesel, E-85,

[10] RegistrationDistributionConverter_Veh16, https://www.epa.gov/sites/default/files/2016-06/reg-distrib-converter-veh16-20100209.xls

[11] Dusan Vuksan & Jinchul Park, MWCOG, 2015 National Ambient Air Quality Standards for Ozone: Redesignation Request and Maintenance Plan Inventory: Alternate Vehicle Fuel and Technologies (AVFT) Inputs (presentation to the Metropolitan Washington Air Quality Committee – Technical Advisory Committee, Jan. 13, 2026).

[12] USEPA, Final Rule: Rescission of the Greenhouse Gas Endangerment Finding and Motor Vehicle Greenhouse Gas Emission Standards Under the Clean Air Act, 91 Fed. Reg. [7686] (Feb. 18, 2026). https://www.govinfo.gov/content/pkg/FR-2026-02-18/pdf/2026-03157.pdf.

[13] USEPA, Proposed Rule: Revision of Tier 4 Criteria Pollutant Standards, Part 1: Amendments to Phase-In Schedule for Light-Duty and Medium-Duty Vehicles, 91 Fed. Reg. [28463] (May. 18, 2026). https://www.govinfo.gov/content/pkg/FR-2026-05-18/pdf/2026-09905.pdf.

compressed natural gas (CNG), battery electric (BEV), and fuel cell electric (FCEV). Specifically, these input assumptions are reflected as follows:

- Assume MOVES5.0.0 default AVFT data shares for each respective year up to and including vehicle model year 2025 (e.g., 2022 default AVFT shares are assumed for vehicle model year 2022).
- Assume MOVES5.0.0 default AVFT data shares from vehicle model year 2025 for every year after 2025 (e.g., 2025 default AVFT shares are assumed for vehicle model year 2038).

5.9 Road Type Distribution

Vehicle miles traveled (VMT) was distributed into the MOVES 13 vehicle types and four road (facility) types. The method of developing VMT distribution was as follows:

1. Through post-processing of travel demand results, jurisdictional VMT distributions of six vehicle types were reclassified to VMT distributions by three vehicle types as follows:

    - Passenger Vehicles = SOV + HOV2 + HOV3 or more + Airport Passenger Trips;
    - Commercial Vehicles = Commercial Vehicles; and
    - Heavy Duty Vehicles = Trucks.

2. VMT percentages of three vehicle types were allocated to the MOVES vehicle types as follows:

    - Passenger Vehicles: VMT percentages by facility type were applied to motorcycles, passenger cars and passenger trucks;
    - Commercial Vehicles: VMT percentages by facility type were applied to commercial trucks;
    - Heavy Duty Vehicles: VMT percentages by facility type were applied to single unit short and long-haul trucks, and combination short- and long-haul trucks;
    - Refuse Trucks and Motor Homes: MOVES default percentage values;
    - School, Transit and Other Buses (Tables 7 and 8): Local network percentages from local data sources (i.e., local bus operators); and
    - Urban and rural percentage split factors were used to further allocate facility type VMT between urban and rural facilities. These factors vary by jurisdiction and were based on the latest HPMS VMT data provided by the three state transportation agencies. Figure 4 illustrates the process of allocating VMT by vehicle type, facility type, and urban/rural split.

Figure 4 Road Type Distribution Development Process

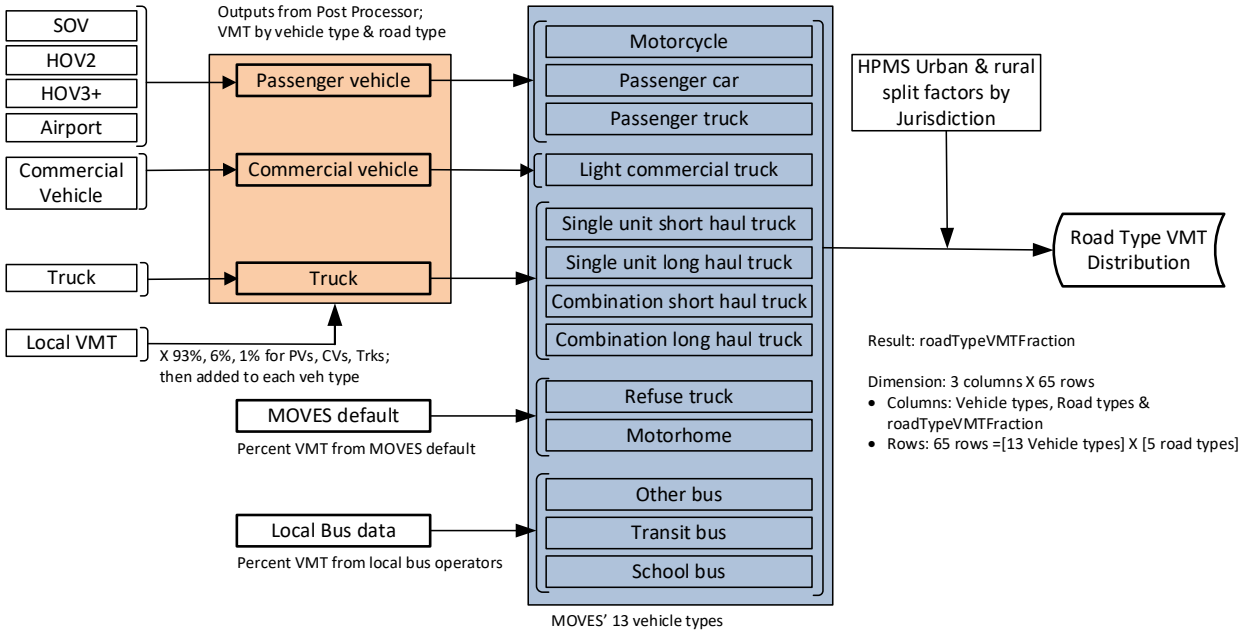

5.10 Source Type (Vehicle) Population

Source type population, or vehicle population, was acquired based on the decoding results of the 2023 vehicle registration (VIN) data. The VIN decoding software output the vehicle population totals by the MOBILE6 vehicle types. The vehicle population was then used to generate "observed" vehicles/households ratios by jurisdiction by using the most recent Cooperative Forecasts and most recent vehicle registration data (in this case, the 2023 VIN data along with the Round 10.0 Cooperative Forecasts for 2023). The "observed" vehicles-to-households ratio was then applied to project future vehicle population for any given year:

$$Rate_{jur}^{2023} = \frac{2023\ VIN\ Vehicle\ Population_{jur}}{2023\ Households_{jur}}$$

$$Projected\ Vehicle\ Population_{y}^{xxxx} = rate_{y}^{2023} X\ Households_{y}^{xxxx}$$

This approach ties vehicle population to households and assumes that vehicle population per household remains constant.[14]

Table 9 shows vehicle population forecasts for each of the analysis years. Vehicle profiles of the 2023 VIN data are used to develop future year vehicle profiles by jurisdiction. Vehicle profiles were prepared in a MOBILE6 format in this data processing first, and were converted to the MOVES vehicle types using a vehicle mapping table provided by EPA. Figure 5 illustrates the process of calculating source type population.

Table 9 MOVES Input Vehicle Population by Analysis Year

State	Jurisidction	2017	2022	2032	2038
District of Columbia	District of Columbia	320,332	283,361	326,549	347,900
	District of Columbia Total	320,332	283,361	326,549	347,900
Maryland	Calvert County	84,800	83,949	89,963	92,235
	Charles County	139,192	146,224	173,951	186,539
	Frederick County	222,657	246,154	286,537	313,752
	Montgomery County	770,807	782,075	846,423	886,638
	Prince George's County	668,348	682,888	738,028	777,182
	Maryland Total	1,885,804	1,941,290	2,134,902	2,256,346
Virginia	City of Alexandria	114,174	121,515	153,412	170,833
	Arlington County	145,216	140,183	159,775	170,077
	Fairfax County	923,053	906,631	990,466	1,033,157
	Loudoun County	317,184	348,308	404,083	423,262
	Prince William County	419,815	444,231	494,515	513,947
	Virginia Total	1,919,442	1,960,868	2,202,251	2,311,277
Regional Total		4,125,578	4,185,519	4,663,702	4,915,523

[14] USDOT. Summary of Travel Trends. 2022 National Household Travel Survey. January 2024. https://nhts.ornl.gov/assets/2022/pub/2022_NHTS_Summary_Travel_Trends.pdf (Table 2-6 shows that average vehicle population per household has not changed significantly in this century)

Figure 5 Source Type Population Development Process of Analysis Year

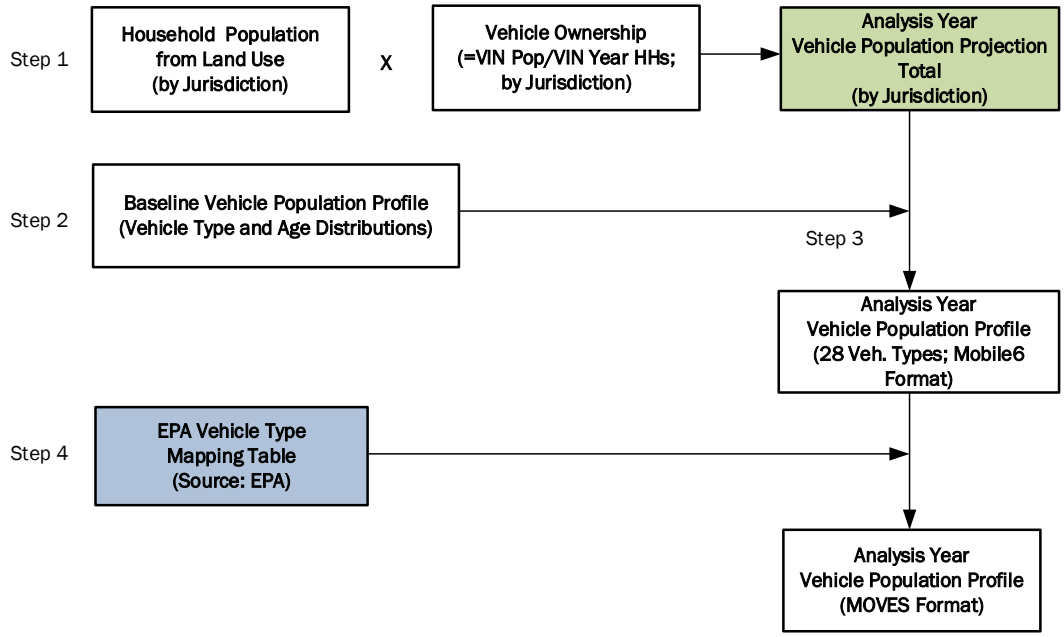

5.11 Inspection/Maintenance (I/M) Programs & Hoteling

The air agencies of the District of Columbia, Maryland, and Virginia provided details of Inspection/Maintenance (I/M) programs for all analysis years in the MOVES5.0.0 ready format.

5.12 Federal and State Specific Control Programs

In addition to the non-travel-related/environmental inputs, there are state-specific programs that were taken into account in the analyses:

- Early NLEV: The District of Columbia, Maryland, and Virginia adopted an Early NLEV program, which was reflected in all analysis years. The input database files are named as moves304_early_nlev_DC, moves5_early_nlev, and va_nlev_input_m500, respectively.
- CAL-LEV Programs: Maryland's CAL-LEV program, adopted in 2011, is reflected in all analysis years. The Maryland Department of the Environment (MDE) provided the following auxiliary database to model these programs in the Maryland jurisdictions: moves5_caleviii2011.
- Stage II Program: State air agencies provided parameters such as Refueling Vapor Program Adjustment and Refueling Spill Program Adjustment, which are included in tabs titled '2017_countyyear,' '2022_countyyear,' '2032_countyyear,' and '2038_countyyear.'

6.0 RESULTS

On-road mobile inventories for the entire ozone nonattainment area are shown in Tables 10 and 11. Table 10 provides the total inventories for the ozone nonattainment area, and Table 11 summarizes the inventories by jurisdiction. The inventories were produced using MOVES5.0.0 for 2017, 2022, 2032 and 2038.

Table 10 2015 Ozone NAAQS RR/MP On-Road Emissions Inventories for Ozone Nonattainment Area (in short tons/day)*

Pollutant	2017	2022	2032	2038
Oxides of Nitrogen (NOx)	110.048	60.519	23.556	15.854
Volatile Organic Compounds (VOC)	53.345	33.861	21.357	17.791

*For 8-Hour Ozone Nonattainment Area

Table 11 2015 Ozone NAAQS RR/MP On-Road Emissions Inventories for Ozone Nonattainment Area by Jurisdiction (in short tons/day)*

		NOx (in short tons/day)				VOC (in short tons/day)			
State	Jurisidction	2017	2022	2032	2038	2017	2022	2032	2038
District of Columbia	District of Columbia	6.895	3.717	1.468	0.963	4.605	2.741	1.751	1.438
	District of Columbia Total	6.895	3.717	1.468	0.963	4.605	2.741	1.751	1.438
Maryland	Calvert County	1.794	1.044	0.409	0.263	1.162	0.733	0.451	0.362
	Charles County	3.591	2.083	0.907	0.622	1.899	1.230	0.856	0.701
	Frederick County	10.385	5.843	2.416	1.643	3.665	2.423	1.568	1.299
	Montgomery County	17.872	9.166	3.525	2.417	9.035	5.610	3.534	2.971
	Prince George's County	22.852	10.769	3.860	2.570	9.776	6.008	3.780	3.168
	Maryland Total	56.494	28.905	11.117	7.514	25.537	16.004	10.190	8.500
Virginia	City of Alexandria	1.525	0.887	0.416	0.288	1.175	0.759	0.569	0.488
	Arlington County	2.414	1.270	0.415	0.273	1.707	1.077	0.663	0.557
	Fairfax County	24.515	14.420	5.558	3.688	11.533	7.306	4.365	3.627
	Loudoun County	7.305	4.741	1.999	1.372	3.520	2.462	1.604	1.351
	Prince William County	10.900	6.578	2.584	1.757	5.269	3.511	2.216	1.830
	Virginia Total	46.659	27.897	10.971	7.377	23.204	15.116	9.417	7.853
Regional Total		110.048	60.519	23.556	15.854	53.345	33.861	21.357	17.791

*For 8-Hour Ozone Nonattainment Area

A detailed listing of MOVES inputs, outputs, and run specification files is provided in Attachment C.

ATTACHMENT A

Non-travel-related MOVES Inputs provided by Sunil Kumar, DEP staff

MOVES5.0.0 inputs for 2017, 2022, 2032, and 2038 (2015 Ozone NAAQS RR/MP)

Reply | Reply All | Forward

Sunil Kumar
To Mark Moran; Dusan Vuksan
Cc Jennifer Desimone; Jeffrey King; Jinchul Park; Daniel Son

Mon 7/28/2025 12:20 PM

You replied to this message on 7/28/2025 1:33 PM.
This message was sent with High importance.

Please find MS-Excel files and databases containing MOVES5.0.0 inputs for fuel formulation, fuel supply, fuel usage fraction, Stage II program, I/M program, AVFT, meteorology, and CAL-LEV program (MD only) in the folder below for milestone years 2017, 2022, 2032, and 2038 for the 2015 ozone NAAQS Redesignation Request and Maintenance Plan analysis.

The above set of input files have been placed in the folder – H:_SIP On-Road Emiss Inv\2015 Ozone SIP\2015 Ozone RR_MP

Please see below a description of various control programs and other databases.

Early NELV Program Databases
DC: moves304_early_nlev_DC
MD: moves5_early_nlev
VA: va_nlev_input_m500

CAL-LEV Program Database (MD Only)
moves5_caleviii2011

Stage II Program
Parameters (Refueling Vapor Program Adjustment and Refueling Spill Program Adjustment) provided in tabs titled "2017_countyyear", "2022_countyyear", "2032_countyyear", and "2038_countyyear" in MS-Excel input files.

AVFT Data
DC, MD, and VA supplied local data, parameters provided in tabs titled "AFVT" in MS-Excel input files.

Meteorology
Parameters provided in tabs titled "Sum_zoneMonthHour" in MS-Excel input files
Met data available from the Dulles airport for the period July 2017 were used to develop onroad emissions inventories using MOVES2014b for the base year 2017 as part of the 2015 Ozone NAAQS requirements. The same data is being used to develop onroad emissions inventories using MOVES5.0.0 for the 2015 Ozone NAAQS Redesignation Request/Maintenance Plan analysis.

Please use the following combination of "representative month/day of the week" for the MOVES5.0.0 runs for this analysis:

Month: July
Day: Weekdays

Model Emissions Output Format

Please use emissions outputs of VOC, NOx, and CO by SCC, as required by EPA.

Thanks,

Sunil

ATTACHMENT B

MOVES TASK FORCE

Summary of Local Data Development for the County Data Manager (Emissions Inventory Approach)*

as of January 11, 2011

LOCAL INPUT DATA CATEGORIES		DATA DESCRIPTION	DATA FORMAT	DATA DEVELOPMENT	LOCAL INPUT DATA APPROVAL DATE
			MOVES	METHODOLOGY	
1	**Age Distribution**	Registered vehicles stratified by age and vehicle type	31 Age Groups (covering 0-30+ years of vehicle age) 13 Vehicle Types	DTP used an EPA Converter to convert local registration data from MOBILE6.2 format to MOVES format	4/20/2010
2	**Average Speed Distribution**	Average vehicle speeds stratified by vehicle type, road type, time of day/type of day (i.e., weekday vs weekend)	Distributions of hourly average vehicle speeds by vehicle type, road type, and type of day (weekday/weekend)	DTP used MOBILE6.2 post-processor speed distribution augmented by local input data for school and transit buses and refuse trucks	Local VHT 7/20/2010 School Buses 9/21/2010 Refuse Trucks 9/21/2010 Transit Buses 10/19/2010
3	**Fuel Supply**	Market share of available fuels by county, month, year, state	MD/VA - EPA Methodology/local data in MOVES format DC - EPA Default Values	None Required (Direct Data Input from DC, MD, and VA air agencies)	Not Required
4	**Fuel Formulation**	Fuel formulation data stratified by state			
5	**I/M Programs**	Available Inspection/Maintenance Programs stratified by state			
6	**Meteorology Data**	Hourly temperature and relative humidity readings	Hourly Records of temperature and relative humidity in MOVES format Start Time: 12:00 am End Time: 11:00 pm	For Conformity Determinations - DEP converted meteorology data from existing SIPs to MOVES format using an EPA converter For Upcoming SIP Development - DEP compiled meteorology datasets from two weather stations based on a 3-yr period (2007-09) pending EPA approval	06/22/2010 (SIP for 2008 or Later Ozone Standard) 07/20/2010 (Conformity for Ozone & PM2.5 – 1997 Standards, CO – 1971 Standard)
7	**Ramp Fraction**	Percentage of driving time on ramps stratified by road type	8% of VHT (EPA National Default)	DTP tested local input data and found consistent with the EPA National Default value	7/20/2010
8	**Road Type Distribution**	Percentages of VMT allocated to each road type by vehicle type	VMT percentages by road type and vehicle type	DTP combined VMT from the travel demand model; and VMT distributions from the travel demand model, NEI data, and MOVES default data	4/20/2010
9	**Source Type Population**	Population of registered vehicles by county and vehicle type	13 Vehicle Types	DTP used vehicle registration and source type fractions	
10	**Vehicle Type VMT**	Annual VMT by HPMS vehicle type	Annual VMT allocated by HPMS vehicle type	DTP used daily VMT and an EPA converter	4/20/2010

*** The Task Force adopted the Emissions Inventory Approach (October 19, 2010)**

**** Documents can be found on the MOVES Task Forc** http://www.mwcog.org/committee/committee/documents.asp?COMMITTEE_ID=253

MOVES TASK FORCE
Summary of MOVES Data Development Documentation
as of January 11, 2011

	LOCAL INPUT DATA CATEGORIES	DATA DESCRIPTION	DATA DOCUMENTATION	
			METHODOLOGY	SENSITIVITY TESTING
1	**Age Distribution**	Registered vehicles stratified by age and vehicle type	Memorandum titled "Development of Local Transportation Data Inputs for MOVES2010 Model" D. Sivasailam Memorandum Drafted: 4/13/2010 Memorandum Presented: 4/20/2010 (Item 3) Memorandum Revised: 5/14/2010 (Item 3b)	Memorandum titled "Results of MOVES 2010 Model Sensitivity...", E. Lucas, Drafted/presented 4/20/2010 (Item 4) Memorandum titled "Results of MOVES2010 Model Sensitivity...," E. Lucas, Drafted/presented 5/18/2010 (Item 4a)
2	**Average Speed Distribution**	Average vehicle speeds stratified by vehicle type, road type, time of day/type of day (i.e., weekday vs weekend)	Memorandum titled "Local Vehicle Hours of Travel (VHT) Distributions," D. Sivasailam Drafted/presented 7/20/10 (Item 3b) Tables titled "School Bus Average Speed Distribution," Drafted/presented 9/21/2010 (Item 3a) Memorandum titled "Vehicle Hours of Travel (VHT) for Refuse Trucks," D. Sivasailam and E. Morrow, Drafted/presented on 9/21/2010 (Item 3a) Memorandum titled "MOVES Vehicle Hours of Travel (VHT) Distribution for Transit Buses," Y. Gao" Drafted/presented on 10/19/2010 (Item 3)	Memorandum titled "Results of MOVES2010 Model Sensitivity Tests: Final Scenario for Average Speed Testing," E. Lucas Memorandum Drafted: 10/16/2010 Memorandum Presented: 10/19/2010 (Item 4) Memorandum titled "Proposed Sensitivity Tests with Different Average Speed Distributions/SIP Temperatures" Drafted/presented 9/21/2010 (Item 3a)
3	**Fuel Supply**	Market share of available fuels by county, month, year, state	Memorandum titled "Development of Methodologies for Meteorology, I/M Program, and Fuel Inputs for Upcoming Ozone SIP (2008 or 2010 Standard) and Existing Conformity Analyses (Ozone & PM2.5 - 1997 Standards, CO - 1971 Standard)," S. Kumar Drafted/presented 6/22/2010 (Item 4a)	Memorandum titled "Results of MOVES2010 Model Sensitivity Tests:...Maryland Clean Car Program-ZEV," E. Lucas, Drafted/presented 5/18/2010 (Item 4a)
4	**Fuel Formulation**	Fuel formulation data stratified by state		
5	**I/M Programs**	Available Inspection/Maintenance Programs stratified by state		
6	**Meteorology Data**	Hourly temperature and relative humidity readings	Memorandum titled "Development of Methodologies for Meteorology, I/M Program, and Fuel Inputs for Upcoming Ozone SIP (2008 or 2010 Standard) and Existing Conformity Analyses (Ozone & PM2.5 - 1997 Standards, CO - 1971 Standard)," S. Kumar Drafted/presented 6/22/2010 (Item 4a) Memorandum titled "Development of Meteorology Inputs for existing Conformity Analyses (Ozone & PM2.5 – 1997 Standards, CO – 1971 Standard)",)," S. Kumar Drafted/presented 7/20/2010 (Item3a)"	Memorandum titled "Results of MOVES2010 Model Sensitivity Tests:...Maryland Clean Car Program-ZEV," E. Lucas, Drafted/presented 5/18/2010 (Item 4a)
7	**Ramp Fraction**	Percentage of driving time on ramps stratified by road type	Memorandum titled "Results of MOVES 2010 Model Ramp Analysis," E. Lucas, Drafted/presented 7/20/2010 (Item 4a)	Memorandum titled "Results of MOVES 2010 Model Ramp Analysis," E. Lucas, Drafted/presented 7/20/2010 (Item 4a)
8	**Road Type Distribution**	Percentages of VMT allocated to each road type by vehicle type	Memorandum titled "Development of Local Transportation Data Inputs for MOVES2010 Model," D. Sivasailam Memorandum Drafted: 4/13/2010 Memorandum Presented: 4/20/2010 (Item 3) Memorandum Revised: 5/14/2010 (Item 3b)	Memorandum titled "Results of MOVES 2010 Model Sensitivity...", E. Lucas, Drafted/presented 4/20/2010 (Item 4) Memorandum titled "Results of MOVES2010 Model Sensitivity...," E. Lucas, Drafted/presented 5/18/2010 (Item 4a)
9	**Source Type Population**	Population of registered vehicles by county and vehicle type		
10	**Vehicle Type VMT**	Annual VMT by HPMS vehicle type	Memorandum titled "Development of Annual VMT for MOVES2010."D. Sivasailam Memorandum Drafted: 4/16/2010 Memorandum Presented: 4/20/2010 (Item 3) Memorandum Revised: 5/14/2010 (Item 3b)	Memorandum titled "Results of MOVES 2010 Model Sensitivity...", E. Lucas, Drafted/presented 4/20/2010 (Item 4) Memorandum titled "Results of MOVES2010 Model Sensitivity...," E. Lucas, Drafted/presented 5/18/2010 (Item 4a)

ATTACHMENT C

Input, Output and "Runspec" Files for MOVES5.0.0 Files: 2017, 2022, 2032 and 2038

(1) 2017

Input Database	Output Database	Runspec
OZN_DC_2017_NAAQ_In	OZN_DC_2017_NAAQ_Out	OZN_DC_2017_NAAQ.MRS
OZN_CAL_2017_NAAQ_In	OZN_CAL_2017_NAAQ_Out	OZN_CAL_2017_NAAQ.MRS
OZN_CHL_2017_NAAQ_In	OZN_CHL_2017_NAAQ_Out	OZN_CHL_2017_NAAQ.MRS
OZN_FRD_2017_NAAQ_In	OZN_FRD_2017_NAAQ_Out	OZN_FRD_2017_NAAQ.MRS
OZN_MTG_2017_NAAQ_In	OZN_MTG_2017_NAAQ_Out	OZN_MTG_2017_NAAQ.MRS
OZN_PG_2017_NAAQ_In	OZN_PG_2017_NAAQ_Out	OZN_PG_2017_NAAQ.MRS
OZN_FFX_2017_NAAQ_In	OZN_FFX_2017_NAAQ_Out	OZN_FFX_2017_NAAQ.MRS
OZN_LDN_2017_NAAQ_In	OZN_LDN_2017_NAAQ_Out	OZN_LDN_2017_NAAQ.MRS
OZN_PW_2017_NAAQ_In	OZN_PW_2017_NAAQ_Out	OZN_PW_2017_NAAQ.MRS

(2) 2022

Input Database	Output Database	Runspec
OZN_DC_2022_NAAQ_In	OZN_DC_2022_NAAQ_Out	OZN_DC_2022_NAAQ.MRS
OZN_CAL_2022_NAAQ_In	OZN_CAL_2022_NAAQ_Out	OZN_CAL_2022_NAAQ.MRS
OZN_CHL_2022_NAAQ_In	OZN_CHL_2022_NAAQ_Out	OZN_CHL_2022_NAAQ.MRS
OZN_FRD_2022_NAAQ_In	OZN_FRD_2022_NAAQ_Out	OZN_FRD_2022_NAAQ.MRS
OZN_MTG_2022_NAAQ_In	OZN_MTG_2022_NAAQ_Out	OZN_MTG_2022_NAAQ.MRS
OZN_PG_2022_NAAQ_In	OZN_PG_2022_NAAQ_Out	OZN_PG_2022_NAAQ.MRS
OZN_FFX_2022_NAAQ_In	OZN_FFX_2022_NAAQ_Out	OZN_FFX_2022_NAAQ.MRS
OZN_LDN_2022_NAAQ_In	OZN_LDN_2022_NAAQ_Out	OZN_LDN_2022_NAAQ.MRS
OZN_PW_2022_NAAQ_In	OZN_PW_2022_NAAQ_Out	OZN_PW_2022_NAAQ.MRS

(3) 2032

Input Database	Output Database	Runspec
OZN_DC_2032_NAAQ_In	OZN_DC_2032_NAAQ_Out	OZN_DC_2032_NAAQ.MRS
OZN_CAL_2032_NAAQ_In	OZN_CAL_2032_NAAQ_Out	OZN_CAL_2032_NAAQ.MRS
OZN_CHL_2032_NAAQ_In	OZN_CHL_2032_NAAQ_Out	OZN_CHL_2032_NAAQ.MRS
OZN_FRD_2032_NAAQ_In	OZN_FRD_2032_NAAQ_Out	OZN_FRD_2032_NAAQ.MRS
OZN_MTG_2032_NAAQ_In	OZN_MTG_2032_NAAQ_Out	OZN_MTG_2032_NAAQ.MRS
OZN_PG_2032_NAAQ_In	OZN_PG_2032_NAAQ_Out	OZN_PG_2032_NAAQ.MRS
OZN_FFX_2032_NAAQ_In	OZN_FFX_2032_NAAQ_Out	OZN_FFX_2032_NAAQ.MRS
OZN_LDN_2032_NAAQ_In	OZN_LDN_2032_NAAQ_Out	OZN_LDN_2032_NAAQ.MRS
OZN_PW_2032_NAAQ_In	OZN_PW_2032_NAAQ_Out	OZN_PW_2032_NAAQ.MRS

(4) 2038

Input Database	Output Database	Runspec
OZN_DC_2038_NAAQ_In	OZN_DC_2038_NAAQ_Out	OZN_DC_2038_NAAQ.MRS
OZN_CAL_2038_NAAQ_In	OZN_CAL_2038_NAAQ_Out	OZN_CAL_2038_NAAQ.MRS
OZN_CHL_2038_NAAQ_In	OZN_CHL_2038_NAAQ_Out	OZN_CHL_2038_NAAQ.MRS
OZN_FRD_2038_NAAQ_In	OZN_FRD_2038_NAAQ_Out	OZN_FRD_2038_NAAQ.MRS
OZN_MTG_2038_NAAQ_In	OZN_MTG_2038_NAAQ_Out	OZN_MTG_2038_NAAQ.MRS
OZN_PG_2038_NAAQ_In	OZN_PG_2038_NAAQ_Out	OZN_PG_2038_NAAQ.MRS
OZN_FFX_2038_NAAQ_In	OZN_FFX_2038_NAAQ_Out	OZN_FFX_2038_NAAQ.MRS
OZN_LDN_2038_NAAQ_In	OZN_LDN_2038_NAAQ_Out	OZN_LDN_2038_NAAQ.MRS
OZN_PW_2038_NAAQ_In	OZN_PW_2038_NAAQ_Out	OZN_PW_2038_NAAQ.MRS